# SXYx 4 axes / ZRF

Arm type | Whipover | Z-axis: clamped base / moving table type (100W)+R-axis

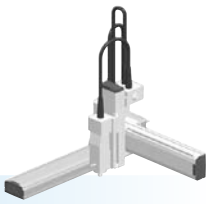

## Ordering method

| SXYx - S | - | [ ] | - | [ ] | - | [ ] | - ZRF - | [ ] | - | [ ] | - RCX340-4 - | [ ] | - | [ ] | - | [ ] | - | [ ] | - | [ ] | - | [ ] |
|---|---|---|---|---|---|---|---|---|---|---|---|---|---|---|---|---|---|---|---|---|---|---|
| Model | Cable | Combination | X-axis stroke | Y-axis stroke | ZR-axis | Z-axis stroke | Cable | Controller / Number of controllable axes | Safety standard | Option A (OP.A) | Option B (OP.B) | Option C (OP.C) | Option D (OP.D) | Option E (OP.E) | Absolute battery |
| | | A1<br>A2<br>A3<br>A4 | 15 to 85cm | 15 to 65cm | | 15 to 35cm | 3L: 3.5m<br>5L: 5m<br>10L: 10m | | | | | | | | |

Specify various controller setting items. RCX340 ▶ P.678

## Specification

| | X-axis | Y-axis | Z-axis | R-axis |
|---|---|---|---|---|
| Axis construction Note 1 | F14H | F14 | F10-BK | R5 |
| AC servo motor output (W) | 200 | 100 | 100 | 50 |
| Repeatability Note 2 (XYZ: mm) (R: °) | +/-0.01 | +/-0.01 | +/-0.01 | +/-0.0083 |
| Drive system | Ball screw ϕ15 | Ball screw ϕ15 | Ball screw ϕ15 | Harmonic gear |
| Ball screw lead Note 3 (Deceleration ratio) (mm) | 20 | 20 | 10 | (1/50) |
| Maximum speed Note 4 (XYZ: mm/sec) (R: °/sec) | 1200 | 1200 | 600 | 360 |
| Moving range (XYZ: mm) (R: °) | 150 to 850 | 150 to 650 | 150 to 350 | 360 |
| Robot cable length (m) | Standard: 3.5 Option: 5,10 | | | |

Note 1. Use caution that the flame machining (installation holes, tap holes) differs from single-axis robots'.
Note 2. Positioning repeatability in one direction.
Note 3. Leads not listed in the catalog are also available. Contact us for details.
Note 4. When the X-axis stroke is longer than 750mm, resonance of the ball screw may occur depending on the operation conditions (critical speed). In this case, reduce the speed setting on the program by referring to the maximum speeds shown in the table below.

## Maximum payload (kg)

| | Z stroke (mm) | | |
|---|---|---|---|
| Y stroke (mm) | 150 | 250 | 350 |
| 150 | 6 | 6 | 6 |
| 250 | 6 | 5 | 4 |
| 350 | 4 | 3 | 2 |
| 450 | 3 | 2 | 1 |
| 550 | 2 | 1 | – |
| 650 | 1 | – | – |

## Controller

| Controller | Operation method |
|---|---|
| RCX340 | Programming / I/O point trace / Remote command / Operation using RS-232C communication |

### SXYx 4 axes / ZRF A1

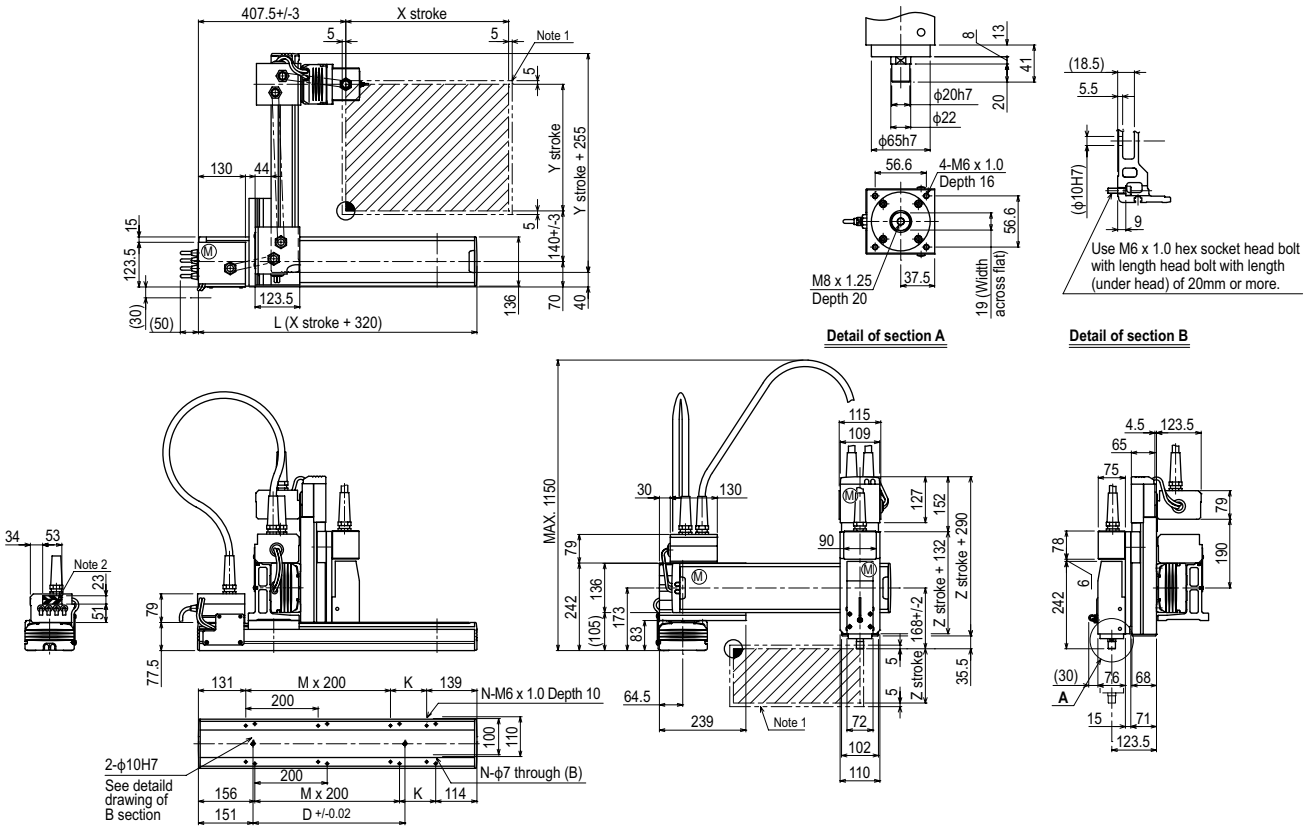


| X stroke | 150 | 250 | 350 | 450 | 550 | 650 | 750 | 850 |
|---|---|---|---|---|---|---|---|---|
| L | 470 | 570 | 670 | 770 | 870 | 970 | 1070 | 1170 |
| K | 200 | 100 | 200 | 100 | 200 | 100 | 200 | 100 |
| D | 240 | 240 | 420 | 420 | 600 | 600 | 780 | 960 |
| M | 0 | 1 | 1 | 2 | 2 | 3 | 3 | 4 |
| N | 4 | 6 | 6 | 8 | 8 | 10 | 10 | 12 |

| Y stroke | 150 | 250 | 350 | 450 | 550 | 650 |
|---|---|---|---|---|---|---|

| Z stroke | 150 | 250 | 350 |
|---|---|---|---|

| Maximum speed for each stroke (mm/sec) Note 3 | | | | |
|---|---|---|---|---|
| | X-axis | 1200 | 960 | 780 |
| | Speed setting | – | 80% | 65% |

Note 1. The moving range when returning to origin and the stop position when stopping by the mechanical stopper.
Note 2. The shaded position indicates an user cable extraction port.

Note 3. When the X-axis stroke is longer than 750mm, resonance of the ball screw may occur depending on the operation conditions (critical speed). In this case, reduce the speed setting on the program by referring to the maximum speeds shown in the table at the left.

Controller RCX340 ▶ 678